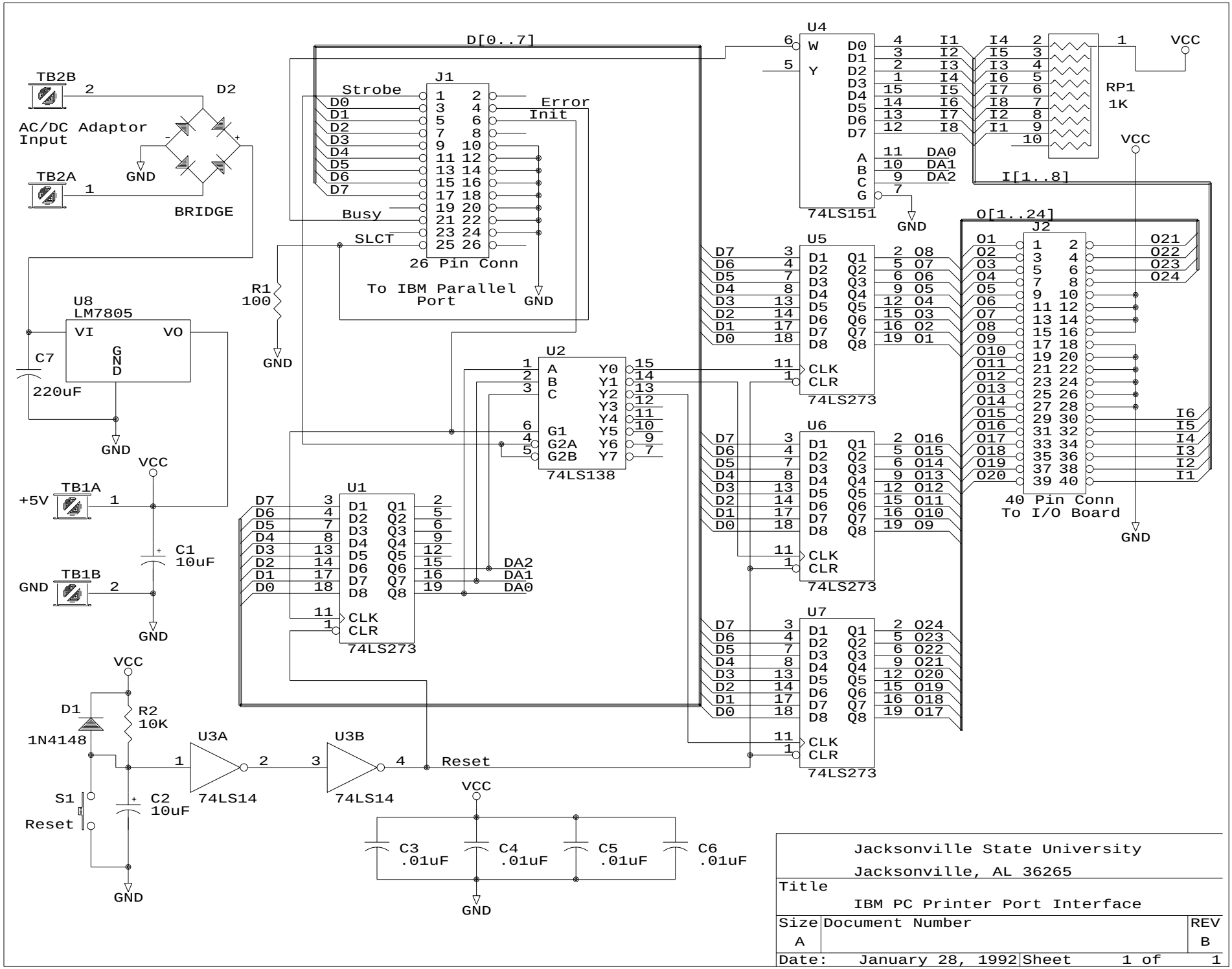

Jacksonville State University
Jacksonville, AL 36265

Title
IBM PC Printer Port Interface

Size	Document Number	REV
A		B

Date: January 28, 1992 Sheet 1 of 1