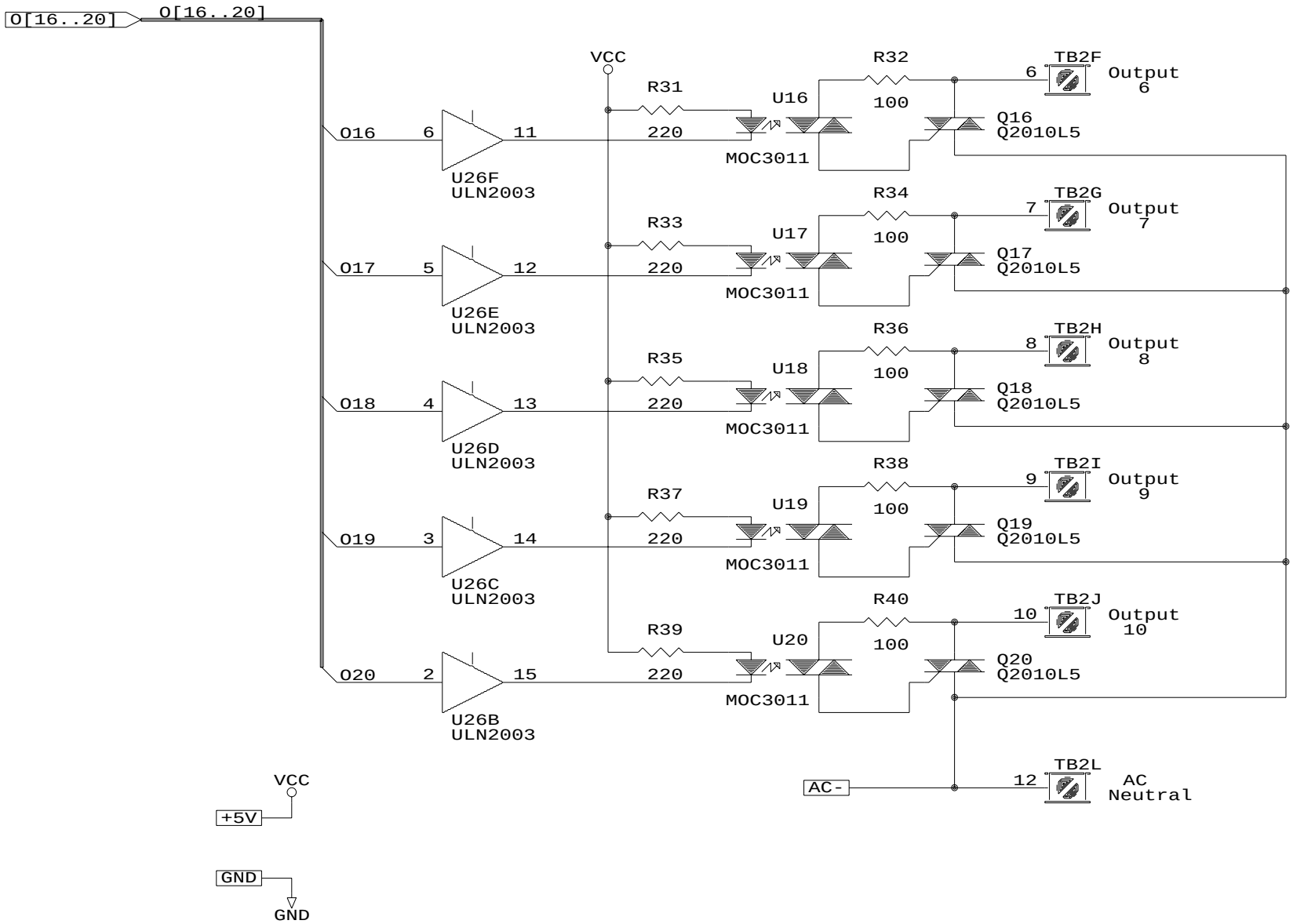

Jacksonville State University		
Title: Triac Outputs 16 to 20		
Size: A	Document Number	REV: B
Date: March 29, 1993	Sheet 5 of 7	