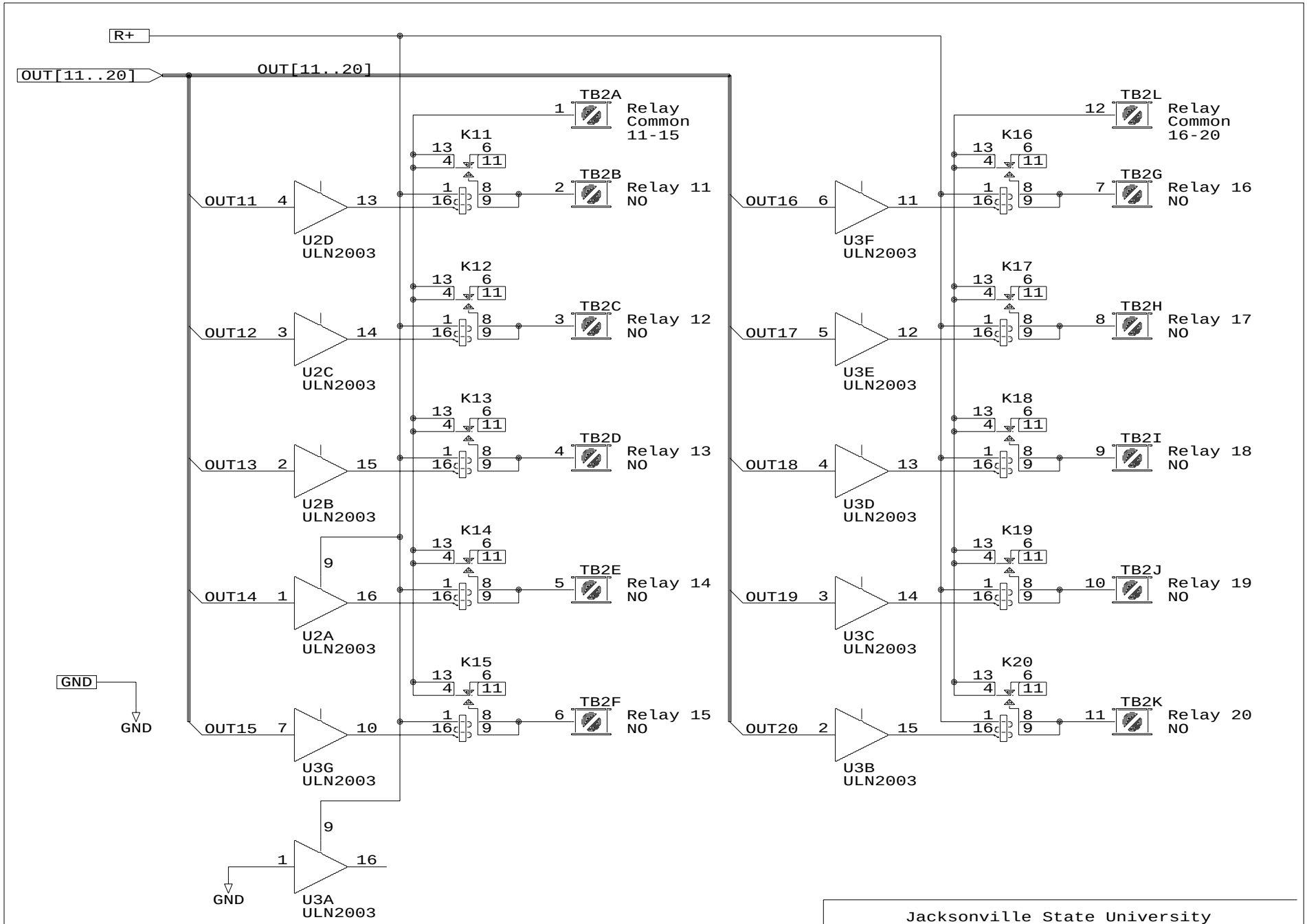

Jacksonville State University		
Title: Relay Outputs 11-20		
Size: A	Document Number	REV: B
Date: February 1, 1992	Sheet 3 of 5	