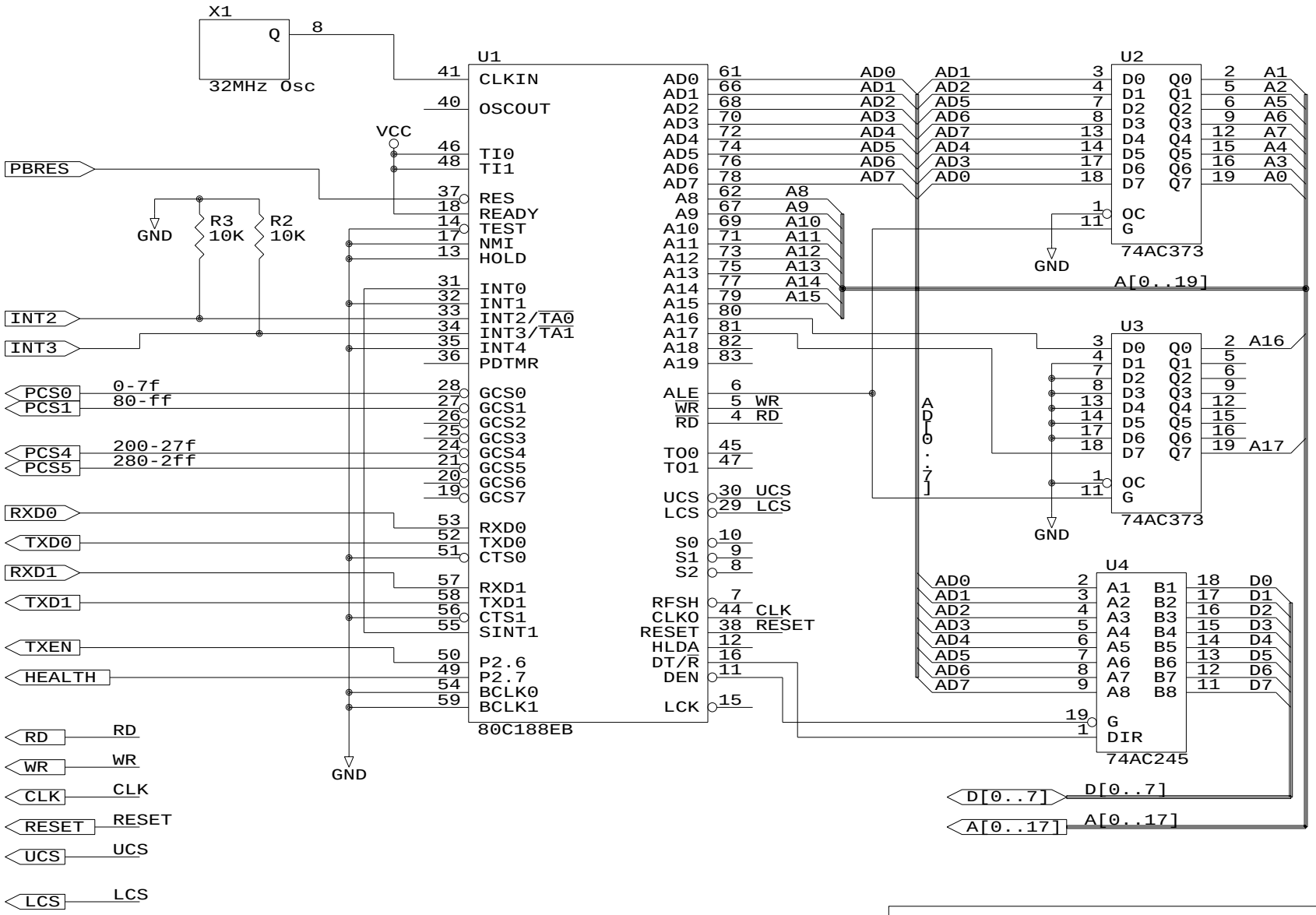

Experimental Lab Jacksonville State University		
Title Experiment Control (EB) CPU		
Size A	Document Number	REV B
Date: March 29, 1993	Sheet 9 of 9	